BL65E33

Application：Fascia Gun、Robot、Electric Door
用途：筋膜槍、機器人、電動門

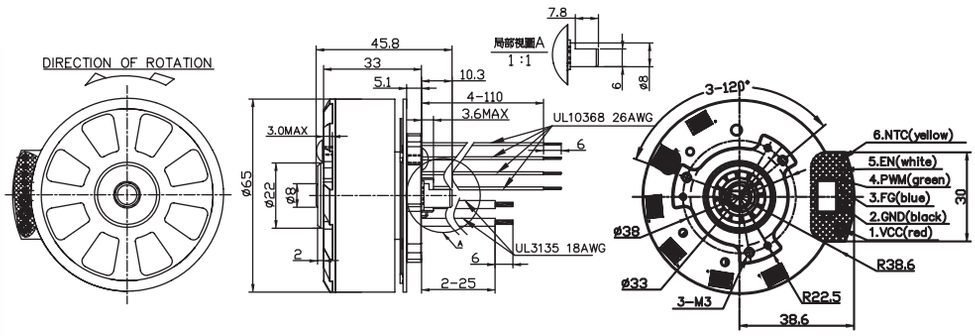

WEIGHT:135g(APPROX)

MODEL	VOLTAGE		NO LOAD		AT MAXIMUM EFFICIENCY						STALL		
	OPERATING RANGE	NOMINAL	SPEED	CURRENT	SPEED	CURRENT	TORQUE		OUTPUT	EFF	CURRENT	TORQUE	
			rpm	A	rpm	A	Kg-cm	mN-m	W	%	A	Kg-cm	mN-m
BL65E33S-12V2.4K70W-C1Y1P	12.0-24.0	12.0V CONSTANT	2738	1.0	2369	10.4	4.25	0.42	103	82	74.2	32	3.14
BL65E33S-24V2.4K98W-C1Y1P	12.0-24.0	24.0V CONSTANT	2400	0.5	2260	4.8	4.26	0.42	98	87	54.0	53	5.19
BL65E33S-21.6V4K160W-B1X0N	12.0-24.0	21.6V CONSTANT	4000	1.4	3420	8.6	3.95	0.39	138	77	55.2	29	2.87
BL65E33S-24V2K50W-B1X0N	12.0-24.0	24.0V CONSTANT	1950	0.4	1750	2.9	3.20	0.31	58	84	25.5	30	2.98

馬達的出軸長度及性能參數，EMC 對策可依客人要求做調整，詳情可詢問相關業務人員。
Please inquire your sales representative for output,performance and EMC solution.

BL65E33S-12V2.7K70W-C1Y1P 12.0V

Volt	Amp	Eff(%)	W(out)	kRPM
20.0	80.00	100	300.0	3.0
18.0	72.00	90	270.0	2.7
16.0	64.00	80	240.0	2.4
14.0	56.00	70	210.0	2.1
12.0	48.00	60	180.0	1.8
10.0	40.00	50	150.0	1.5
8.0	32.00	40	120.0	1.2
6.0	24.00	30	90.0	0.9
4.0	16.00	20	60.0	0.6
2.0	8.00	10	30.0	0.3
0.0	0.00	0	0.0	0.0

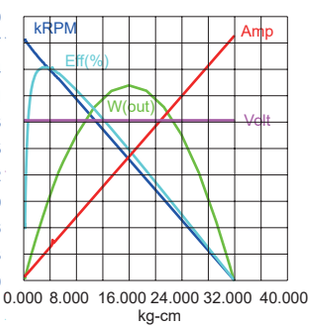

BL65E33S-24V2.4K98W-C1Y1P 24.0V

Volt	Amp	Eff(%)	W(out)	kRPM
30.0	60.00	100	400.0	3.0
27.0	54.00	90	360.0	2.7
24.0	48.00	80	320.0	2.4
21.0	42.00	70	280.0	2.1
18.0	36.00	60	240.0	1.8
15.0	30.00	50	200.0	1.5
12.0	24.00	40	160.0	1.2
9.0	18.00	30	120.0	0.9
6.0	12.00	20	80.0	0.6
3.0	6.00	10	40.0	0.3
0.0	0.00	0	0.0	0.0

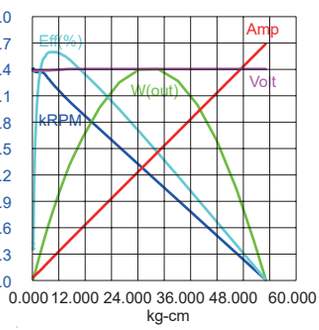

BL65E33S-21.6V4K160W-B1X0N 21.6V

Volt	Amp	Eff(%)	W(out)	kRPM
30.0	60.00	100	300.0	4.0
27.0	54.00	90	270.0	3.6
24.0	48.00	80	240.0	3.2
21.0	42.00	70	210.0	2.8
18.0	36.00	60	180.0	2.4
15.0	30.00	50	150.0	2.0
12.0	24.00	40	120.0	1.6
9.0	18.00	30	90.0	1.2
6.0	12.00	20	60.0	0.8
3.0	6.00	10	30.0	0.4
0.0	0.00	0	0.0	0.0

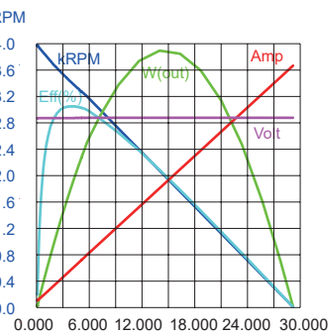

BL65E33S-24V2K50W-B1X0N 24.0V
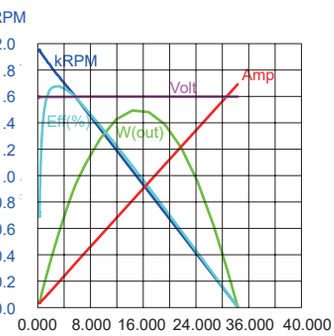
Volt	Amp	Eff(%)	W(out)	kRPM
30.0	30.00	100	200.0	2.0
27.0	27.00	90	180.0	1.8
24.0	24.00	80	160.0	1.6
21.0	21.00	70	140.0	1.4
18.0	18.00	60	120.0	1.2
15.0	15.00	50	100.0	1.0
12.0	12.00	40	80.0	0.8
9.0	9.00	30	60.0	0.6
6.0	6.00	20	40.0	0.4
3.0	3.00	10	20.0	0.2
0.0	0.00	0	0.0	0.0